BEETLE /iPOS Entry

Compact POS System

User Manual

Edition April 2010

Contents

Manufacturers Certification

The device complies with the requirements of the EEC directive 2004/108/EC with regard to ‘Electromagnetic compatibility" and 2006/95/EC “Low Voltage Directive”.

Therefore, you will find the CE mark on the device or packaging.

Tested Safety

The POS system has been provided with the symbol for “Tested Safety”.

In addition, the BEETLE has received the UL symbol and cUL symbol.

Note on the laser

FCC-Class A Declaration

This equipment has been tested and found to comply with the limits for a Class A digital device, pursuant to part 15 of the FCC Rules. These limits are designed to provide reasonable protection against harmful interference when the equipment is operated in a commercial environment. This equipment generates, uses, and can radiate radio frequency energy and, if not installed and used in accordance with the instruction manual, may cause harmful interference to radio communications.

Operation of this equipment in a residential area is likely to cause harmful interference in which case the user will be required to correct the interference at his own expense.

Modifications not authorized by the manufacturer may void users authority to operate this device.

This class A digital apparatus complies with Canadian ICES-003.
Cet appareil numérique de la classe A est conforme à la norme NMB-003 du Canada.

Important notes

The compact POS system BEETLE /iPOS conforms to the current safety standards for data processing equipment.

- If this device is taken from a cold environment into the operating room, moisture condensation may form. The device must be absolutely dry before being put into service; an acclimatization period of at least two hours must therefore be observed.
- This device is equipped with a safety-tested power cable and may be connected only to a prescribed grounded-contact power socket.
- When setting up the device, ensure that the power socket on the device and the grounded-contact power socket are easily accessible.
- To disconnect the device from the supply voltage completely, switch off the device and disconnect the power plug.
- Whenever work of any kind is done on the device, as well as when data cables are plugged and unplugged, the device must be completely disconnected from the line voltage. To do so, turn the device off and unplug the power cord.
- Ensure that no foreign objects (c.g. office clips) find their way into the device, as this may lead to electric shocks or short-circuits.
- Never plug in or unplug data communication lines during thunderstorms.
- Protect devices from vibrations, dust, moisture and heat.
- If liquids were spilled over your BEETLE /iPOS switch off the system and disconnect the power plug. Dry the device with a cloth and leave it switched off for a while.

- Always dispose of used parts in an environmentally safe manner.

- The lithium battery must be disposed of in accordance with local regulations for special waste.

- In emergencies (e.g. damaged housing or damaged power cable, penetration by liquids or foreign bodies), the device must be switched off immediately, the power plug disconnected and the Customer Service of Wincor Nixdorf (WN) or your dealer must be notified.

- The device may only be repaired by authorized qualified personnel. Unauthorized opening of the device and inexpertly carried-out repairs may not only seriously jeopardize the safety of the user, but also cancel all warranty and liability agreements.

- If the display element is damaged and the liquid crystal solution leaks out onto your hands or clothing, please wash your hands or clothing immediately under running water for at least 15 minutes, using soap or alcohol.
  If the liquid comes into contact with your eyes, consult a medical doctor immediately.

- You should connect your BEETLE or other IT-devices only to power supply systems with separately guided protective earth conductor (PE). This kind of electricity system is known as TN-S network. Do not use PEN conductors!
  Please also observe the recommendations of the norm DIN VDE 0100, Part 540, Appendix C2 as well as EN50174-2, §5.4.3. Thus, you can help to avoid possible malfunctions.

警告使用者

這是甲類的資訊產品, 在居住的環境使用時, 可能會造成射頻干擾, 在這種情況下, 使用者會被要求採取某些適當的對策.

Introduction

With the BEETLE /iPOS Wincor Nixdorf meets the growing demands of the retail market for sophisticated Point-of-Service and Kiosk system solutions.

Designed for food and hospitality services, the BEETLE /iPOS offers an integrated touch terminal with smallest footprint. The innovative concept of the BEETLE /iPOS integrates the display, the central processing unit and the power supply unit in one housing. A variety of options such as the use as stand or wall mounting system, integrated loudspeakers, integrated scanner and printer enable the performance of a comprehensive range of features.

About this manual

This manual describes the compact POS system BEETLE /iPOS.

This documentation is intended to help you to work with the POS system and to serve as a reference work. The detailed table of contents helps you find the desired information quickly and easily.

The first section describes
everything you need to do before switching on the POS system and how to connect peripherals to the BEETLE /iPOS.

The second section contains
the installation of Windows operating systems.

The third section provides
a brief overview of the components of your BEETLE system.

The fourth section contains
the possible configuration variants of your BEETLE /iPOS

The five section provides
a brief overview of the Wincor Nixdorf Retail Software.

The Appendix
contains the most important technical data, a glossary and a list of abbreviations.

Notes in the manual are marked by this symbol.

This symbol is used for warnings.

The type and scope of application programs depend on the customer's own selection; therefore, software will not be discussed further in this manual.

Separate manuals are included in the scope of the connectable peripherals. For this reason, a more detailed description of these devices will not be provided here. For more information see the relevant manuals.

Care of the BEETLE /iPOS

Clean your BEETLE /iPOS at regular intervals with a suitable plastic-surface cleaner.

Make sure that the power plug is disconnected, connector cables are unplugged and that no liquid finds its way into the device.

The glass surface of your Touch Screen should be cleaned with a mild, commercially available glass cleaning product. All pH neutral materials (pH 6 to 8) are good for cleaning.

Recycling the BEETLE /iPOS

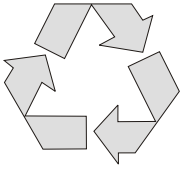

Environmental protection does not begin when time comes to dispose of the BEETLE; it begins with the manufacturer. This product was designed according to our internal norm "Environmental conscious product design and development".

The compact BEETLE /iPOS system is manufactured without the use of CFCs and CCHS and is produced mainly from reusable components and materials.

The processed plastics can, for the most part, be recycled. Even the precious metals can be recovered, thus saving energy and costly raw materials.

Please do not stick labels onto plastic case parts. This would help us to re-use components and material.

You can protect our environment by switching on your equipment only when it is actually needed. If possible, even avoid the stand-by-mode as this wastes energy, too. Also switch your equipment off when you take a longer break or finish your work.

There are still some parts that are not reusable. Wincor Nixdorf guarantees the environmentally safe disposal of these parts in a Recycling Center, which is certified pursuant to ISO 9001 and ISO 14001.

So don't simply throw your BEETLE system on the scrap heap when it has served its time, but take advantage of the environmentally smart, up-to-date recycling methods!

Please contact your competent branch or the Recycling Center Paderborn (for European countries) for information on how to return and re-use devices and disposable materials under the following mail address:

Email: info@wincor-nixdorf.com

We look forward to your mail.

Warranty

Wincor Nixdorf guarantees generally a warranty engagement for 12 months beginning with the date of delivery resp. the date of acceptance. This warranty engagement covers all those damages which occur despite a normal use of the product.

Damages because of

- improper or insufficient maintenance,
- improper use of the product or unauthorized modifications of the product,
- inadequate location or surroundings

will not be covered by the warranty.

For details please consult your contract documents.

All parts of the product which are subject to wear and tear are not included in the warranty engagement.

Please order spare parts at the Wincor Nixdorf customer service.

BEETLE /iPOS

Advantages at a Glance

- Ergonomic Terminal Workplace
- Designed for Touch Operation
- 12.1”/15” TFT Flat Screen (Capacative, Resistive Touch Technology or Infrared- Touch)
- Splash proof Design
- Multimedia Capabilities
- Magnetic/ Smart Card Reader
- User Identification with waiter lock
- Stand or Wall Mounting Options
- Hard Disk or Flash Disk
- Intel Mobile Processor

As there is this wide range of possibilities for implementing the BEETLE /iPOS can be applied in all trade market segments like retailing, department stores, self-service stores or in restaurants and pubs.

The illustrations below show you how your compact POS system can grow - from a scanner to integration in a network.

BEETLE /iPOS Peripherals

Customer Display

Scale

Keyboard

Monitor

Cash Drawer

Scanner

Printer

BEETLE /iPOS in a Network

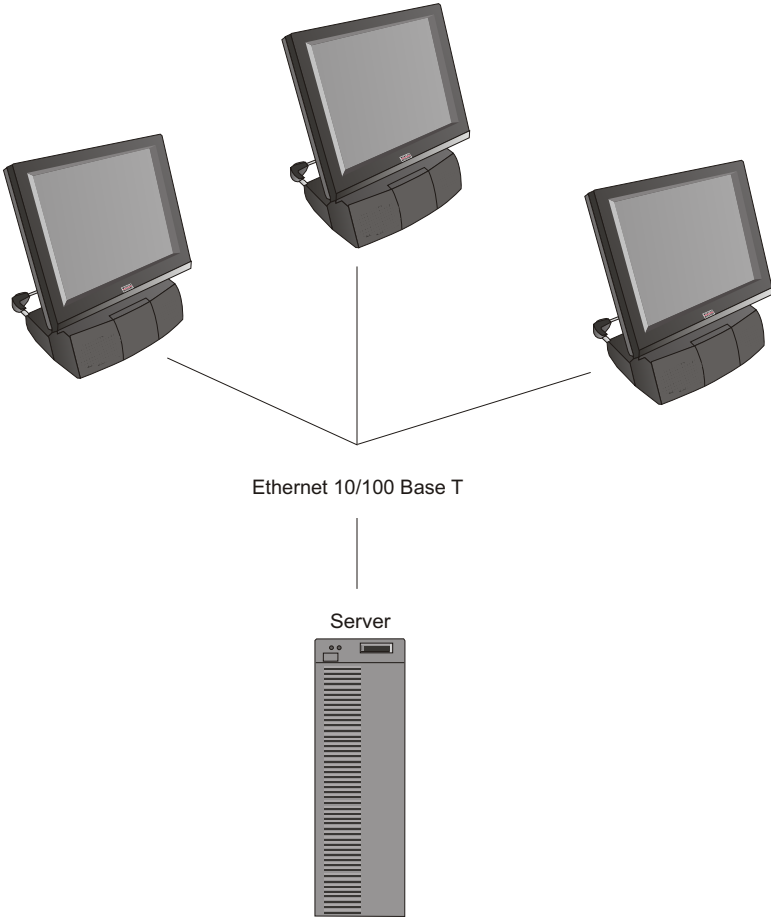

Before switching on the System

Unpacking and checking the System

Unpack the parts and check to see whether the delivery matches the information on the delivery note.

The carton contains the basic unit and a country-specific accessories kit. Some ordered composition may be installed.

Please indicate the number of your delivery ticket and delivery ticket position and serial number of the respective device. The serial number can be found on the label illustrated below which is located at the rear of the housing; it may be necessary to remove the cable cover.

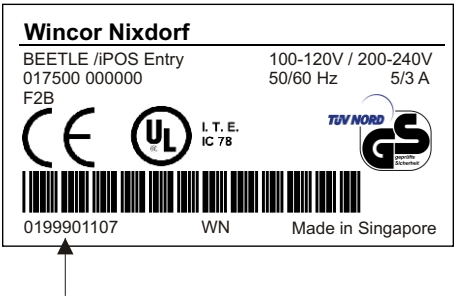

The serial number is located on the label below the bar code.

Transport the device only in its original packaging (to protect it against impact and shock).

Setting up the device

Set up the BEETLE system where it will not be exposed to extreme environmental conditions. Protect the device from vibrations, dust, moisture, heat and strong magnetic fields.

The BEETLE must not be operated in altitudes above 2000 m (6562 ft AMSL). Should you have any questions, please contact you retailer or our service department.

If the equipment is to be fitted, you must ensure that the specified minimum distances are maintained and constant ventilation is provided. The minimum

distance upwards is 10 mm. The immediate ambient temperature of the system must not exceed 40° C/104 °F. These requirements are met, for example, if the equipment is not built into an enclosed piece of furniture.

Adjustment of the Footed Stand

For a better stand or utilisation of the footprint, the footed stand is adjustable. Ensure that the footed stand is inserted in case a 12,1” screen is installed and is pulled out in case a 15” screen is installed.

Adjust the position of the footed stand as follows:

- Remove the cable cover.

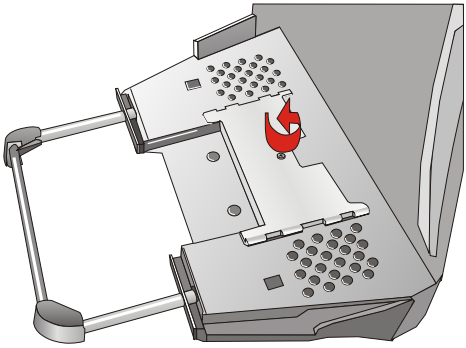

Loosen the screw and lift the metal cover off the openings.

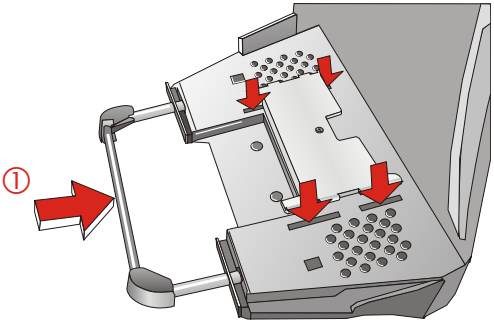

Push the bracing (see (1)) into position and then put the metal cover into front position. Secure it with the screw.

Cabling of the BEETLE /iPOS

Always make sure that the system is switched off when you do cabling works.

Install the system by following the steps described below:

- The cable cover must be removed, if present.

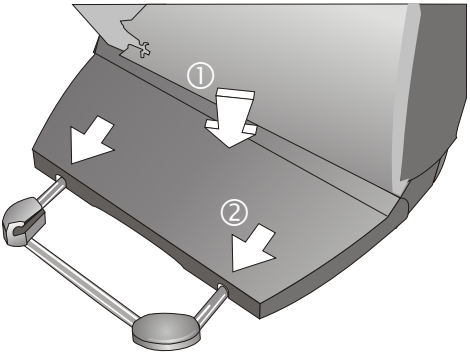

Press on the center of the cable cover (1) and push it backwards (2).

- Remove the port cover on the bottom side of the BEETLE system.

Tilt the screen backwards.

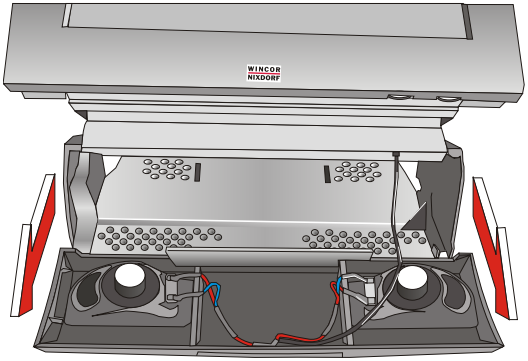

First remove the cover of the loud-speaker. Now you can easily reach the ports.

Press the bezel upwards. The faceplate is very tight.

Pull the cover in your direction and take it off.

- Plug in and secure the data cable.

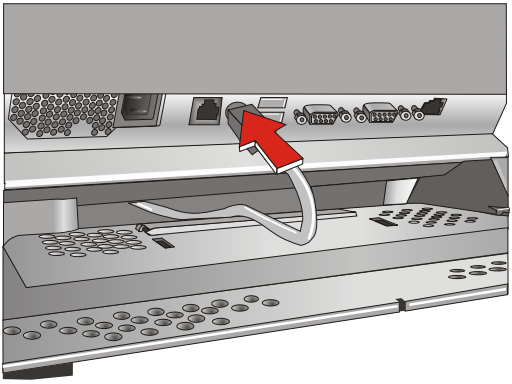

In this case: the keyboard cable.

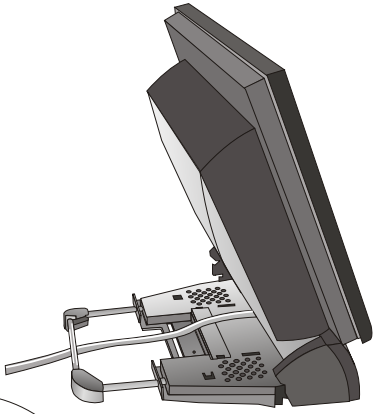

Lead the cable through the back center so that after completing the connection of the cables all can fit under the cable cover.

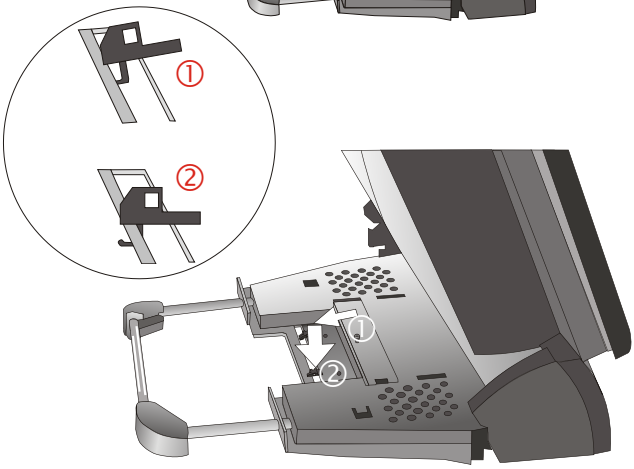

The delivery contains a set of clamps, plastic binders and a metal plate for fixing the strain relief.

Put the clamps slightly angled into the opening of the footed stand (1) and push it downward (2).

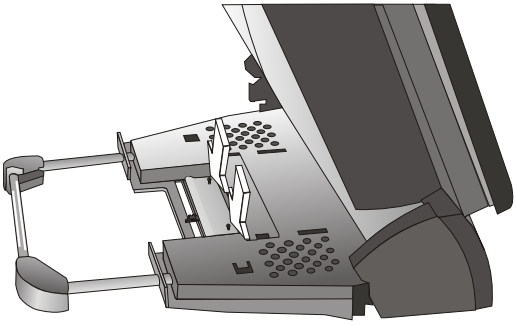

Insert all the clamps you need in this way and then fix them by tightening the metal plate with the two screws.

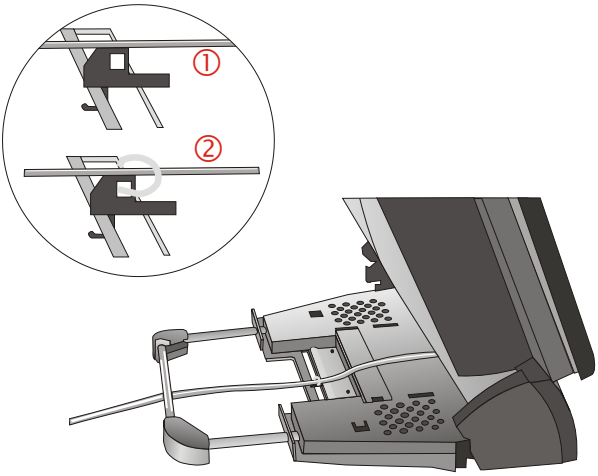

Lead the cables over the clamps (1) and then fix them with the plastic binders (2).

- Plug one end of the power cable into the socket of the BEETLE /iPOS.
- Close the cable cover.

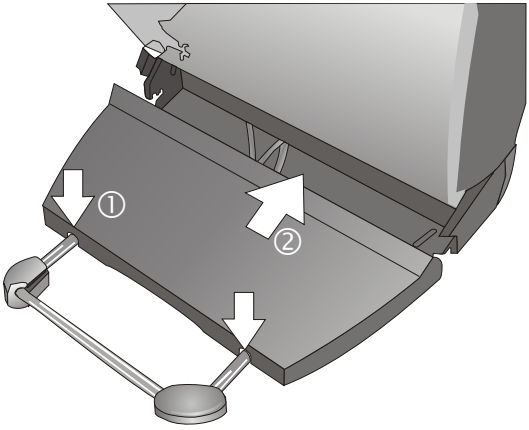

Place the recesses of the cable cover on the cross beams of the footed stand (1).

Close the cable cover by moving it from the rear to the front side (2).

- Connect the other end of the power cable to the main power supply.

Disconnecting cables

Never unplug a cable by pulling the cable but take hold of the actual plug itself. Follow the procedure below when disconnecting cables:

- Turn off all power and equipment switches.
- Remove the cable cover.
- Unplug all data communication cables from the sockets of the data networks.
- Unplug all power plugs from the grounded-contact power sockets.
- Unplug all cables from the devices.

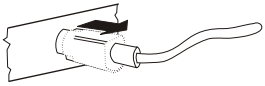

With MINI-DIN plugs, the plug remains inserted until released.

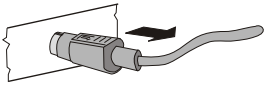

Pull the plastic covering from the connecting socket with your thumb. The lock is released. The metal of the plug is visible.

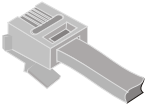

RJ12 and RJ45 plugs lock in when you insert them. To release them push the latch under the plug to the top.

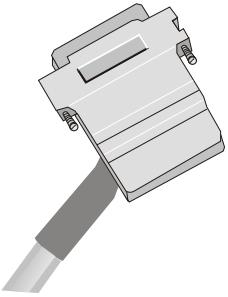

The D-sub typ connector is used for parallel or serial interfaces. Release the connector by loosening the two screws.

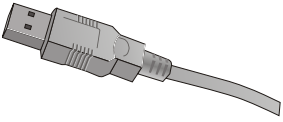

Take hold of the USB connector housing and release the connection.

Basic settings

Ex works, the BEETLE /iPOS is configured to your order. Your configuration must be subsequently adapted to support supplementary devices such as scanners. For more information, contact the WN branch office responsible for your area.

Connecting to the mains power supply

All devices belonging to the compact BEETLE /iPOS system that have a separate power cable must be connected to the same electric circuit.

- Make sure that all data cables on the system unit and peripherals are connected correctly.
- Plug all power cables belonging to the BEETLE and the peripherals into the grounded-contact power sockets.

You can now switch on the BEETLE /iPOS by pushing the ON-button at the front of the box. Pushing (approx. 4 sec.) the button again will lead to a standby mode. To disconnect the device from the supply voltage completely, disconnect the power plug.

Adjusting the System's Loudspeaker

You can set the volume as desired by means of a menu described in the manual "BEETLE POS Motherboard", chapter "BIOS Setup".

Light emitting diode (LED)

The LED green (POWER) lights when the BEETLE /iPOS is switched on and changes to yellow in standby mode.

Connecting peripherals

The peripherals mentioned here are available as options and are not part of the basic configuration. A separate manual is provided for each of the connectable components. For more detailed information, please consult the relevant documentation.

The figure shows the back panel of the BEETLE /iPOS with the locations of the connecting sockets and connecting plugs. If you wish to connect a monitor, however, you must also have a video board.

You must not connect peripherals with the system switched on. (Except for peripherals with USB-connectors).

You can connect or disconnect USB devices during operation of your BEETLE, provided that these devices comply with the specifications according to usb.org.

Other peripheral devices with higher power requirement (such as Powered USB printer) should be connected to or disconnected from your BEETLE system only after the BEETLE has been switched off!

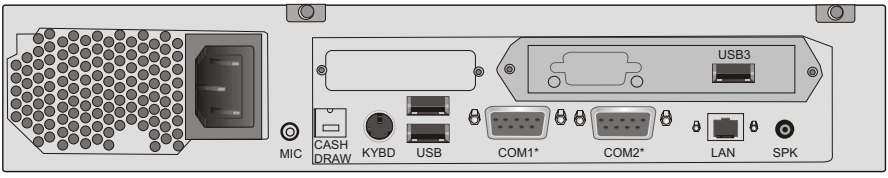

Keyboard (KYBD)

The BEETLE /iPOS has a 6-pin mini-DIN jack for connecting a keyboard. Make sure that the connector is plugged firmly into the socket to prevent malfunctioning. Power is supplied to the keyboard via this socket. If you wish to connect an older standard PC keyboard with DIN connector, you must use a special adapter cable, obtainable from the WN branch office responsible for your area.

You can connect a mouse in parallel via a Y-cable.

COM1* and COM2*

Devices without an independent power supply are connected to the COM1* or COM2* serial interface, depending on the systems configuration. COM1* and COM2* are designed as 9-pin D-sub jacks.

Following devices can be connected:
Scanner
Customer display
Cashier display
Hybrid card reader

Each port will provide 12V with max. 600mA, 5V with max. 300mA.

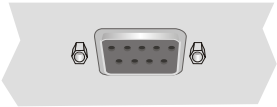

When an onboard TFT adapter with Touch Screen function is installed, one of the COM interfaces for external connections is without effect. If a POS board is installed, the four COM interfaces are usable.

Make sure that the connectors are plugged securely into the sockets to prevent possible malfunctioning.

COM3* and COM4* (optional)

The optional POS-Board provides a COM3* and a COM4* interface, without power supply. It is possible to install standard peripherals with separate power supply, e.g. a scale, a printer or a modem.

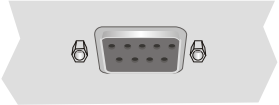

Monitor (optional)

If a CRT bridge is installed, you can connect a monitor to the system via the 15-pin D-sub jack on the CRT bridge. The power of the monitor is supplied by a separate power cord. You can connect all flat screens or CRT monitors that have an analog interface.

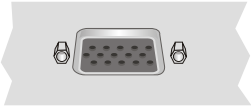

TFT - LCD Display (optional)

If a TFT controller is installed you can connect a second digital LCD monitor to the BEETLE /iPOS. Connect the 40-pin data cable of the LCD to the system. The signals for the touch screen function and the power supply is also made via this cable.

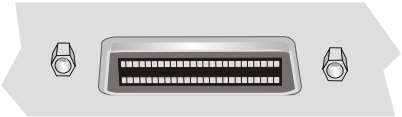

The COM4 interface is not available when a POS board is installed.

Network

The system can be connected to a network (LAN) at the POS terminal back panel. Alternativelly, you can install a wireless LAN (IEEE802.11b).

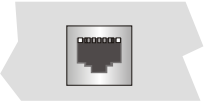

You must only use shielded twisted pair cables.

Cash Drawer

The BEETLE /iPOS has one RJ12 socket at the POS-Board, when this board is installed.

Make sure that the connector is plugged firmly into the socket to prevent malfunctioning. RJ12 plugs lock in when you insert them. Power is supplied to the cash drawer via this socket, +24V +5% / -10%.

Connecting daisy chained cash drawers and 12V OEM-drawers is prohibited!

USB (Universal Serial Bus)

To this USB interface you can connect a variety of USB-peripherals, e.g. scanners, scales and mouses.

Only connect devices equipped with a shielded cable to the USB interface.

Only connect cables to the 24V connector that are marked with DP-1 or DP-2.

BEETLE /iPOS - the components

Overview

The following figures show the BEETLE /iPOS, 15”.

Reverse order of brightness and volume thumb wheels with the 12.1” monitor.

The figure below shows the inside of the BEETLE /iPOS.

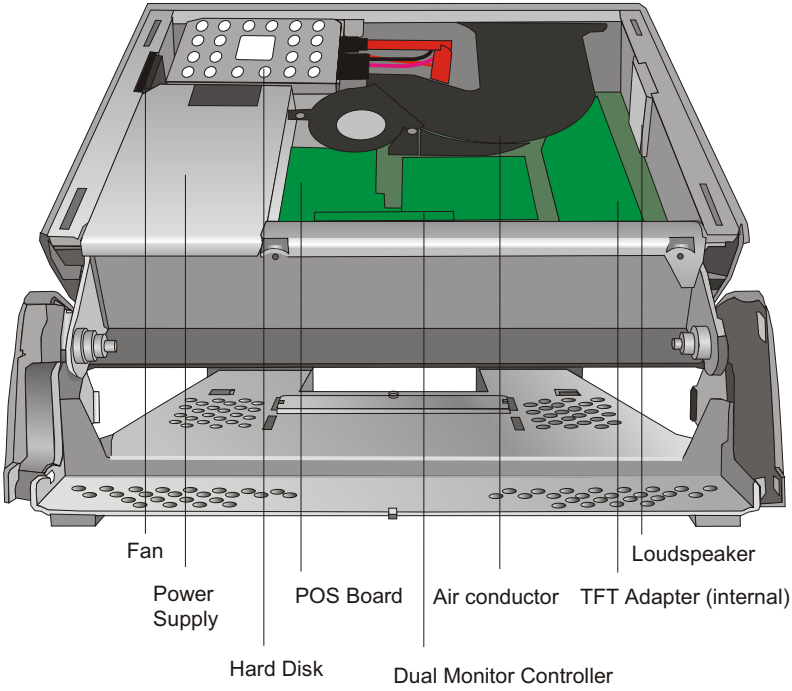

In the following please find some add-ons to your BEETLE /iPOS

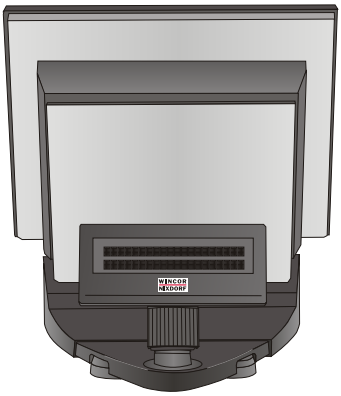

BEETLE /iPOS with customer display

… with swipe card reader

BEETLE /iPOS with waiters lock

.... with scanner

Capacative Touch Screen (Option)

General

The TFT Touch Screen works according to the principle of a change in analog capacitance. It has a glass screen with a transparent, thin-film overlay on the surface. This is fully sealed and protected by a further layer of clear glass. Electrodes on the edges of the screen provide a uniform low-voltage field. As soon as you touch the screen with your finger the contact point is “recognized” by the change in capacitance.

Because this takes place very quickly - 15 milliseconds after being touched - the Touch Screen is optimally equipped for a number of different requirements and applications.

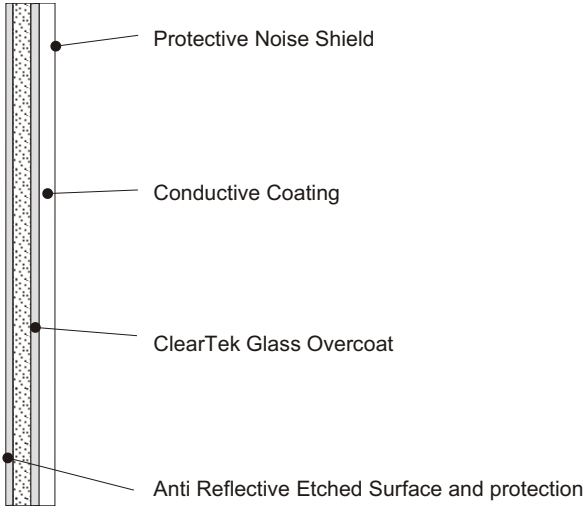

The programming interface of the screen is identical to the mouse interface.

Touch Screen and Sleep Mode

Using the Touch Screen with a BEETLE Pentium CPU, an entry via touch during sleep mode may lead to a faulty input.
During sleep mode nothing can be read from the LCD flat screen. Entries via touching the screen will still be processed by the system, but without the system “waking up”.

For these reasons it is not recommended to set the sleep mode. For details please read the chapter “BIOS Setup” in the user guide “POS Motherboard”.

How to Operate

The Touch Screen responds to the slightest contact, therefore you do not have to apply much pressure when working with the screen. This does not only safe time, but is also kind to your joints!

Touching the touch glass has the same effect as clicking the left mouse button. You only need to apply a little pressure with the fingertip. In this capacitive process only fingertip contact is recognized. The screen does not react in any way if touched, for example, with a pencil or a glove.

Before adjusting the screen angle switch off the system!

Cleaning Instructions

Always turn off the system before cleaning.

The glass surface of your Touch Screen should be cleaned with a mild, commercially available glass cleaning product. All pH neutral materials (pH 6 to 8) are good for cleaning. Cleaners with pH values 9 to 10 are not recommended. Cleaning with water and isopropyl alcohol is possible as well.

Do not use solvents containing acetic acid.

Use a soft, fine-meshed cloth to clean the surface. Dampen the cloth slightly and then clean the screen.

Resistive Touch Screen (Option)

General

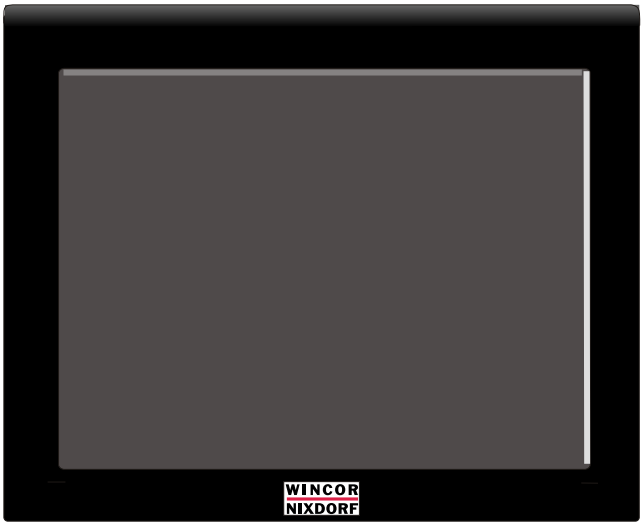

The resistive TFT Touch Screen is constructed of a hard-coated polyester topsheet that is overlaid on a conductively-coated glass layer. Voltage is applied to the topsheet. As the user touches the screen, the topsheet compresses into contact with the glass layer, and current flows to the four corners in proportion to the distance from the edge. The controller then calculates the position of the finger or stylus, based on the current flow. Because the controller derives both the “X” and “Y” touch coordinates from the stable glass layer, the accuracy and operation of the touchscreen is unaffected by damage to the topsheet caused by extended use or neglect.

Construction of the resistive Touch Screen:

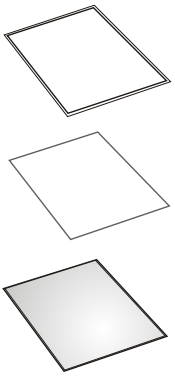

Hard-coated polyester topsheet

Adhesive

Glass substrate with spacer Dots

How to Operate

Touching the touch screen has the same effect as clicking the left mouse button. You only need to apply a little pressure with the fingertip. In this resistive process not only fingertip contact is recognized. The screen does react in any way if touched, for example, with a stylus. The recommended material for a stylus is polyacetat. The stylus should have a minimum spherical radius of 0.8 mm and contain no sharp edges or burrs that may cause damage to the topsheet.

Before adjusting the screen angle switch off the system!

Cleaning Instructions

Always turn off the system before cleaning.

The surface of your Touch Screen should be cleaned with a water-based solvent or a non-abrasive cleaner.

Do not use solvents containing acetic acid or methylene chloride.

Use a soft, fine-meshed cloth to clean the surface. Dampen the cloth slightly and then clean the screen.

Infrared Touch Screen (Option)

General

The infrared (IR) technology is based on the interruption of a grid of IR light beams before the surface of a screen. The touch frame contains a row of infrared light emitting diodes (LEDs) and photo transistors, each mounted on two opposite sides to create a grid of invisible infrared light. The screen is made of frames. The electronic is concealed behind an infrared-transparent bezel, which allows the infrared beams to pass through.

How to operate

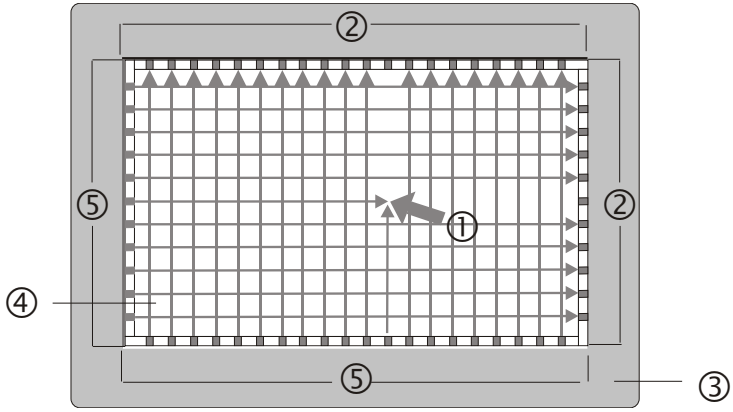

1	Touch Activation
2	Photo Transistors
3	Infrared-transparent Bezel
4	Active Display Area
5	IR- LEDs

INFRARED TOUCH SCREEN (OPTION)

IR light beams are produced and transmitted over the surface of the screen, the photo sensors accept the beams. When an object (min. 7mm Ø), such as a finger, enters the grid, it obstructs the beams. One or more photosensors detect the absence of light and transmit a signal, that identifies the x and y coordinates.

Breaking through the grid has the same effect as clicking the left mouse button.

To avoid malfunctions: Do not fix labels or stickers on the frame and do not put pencils or the like on the inner frame.

Cleaning Instructions

Always **turn off the system** before cleaning.

The glass surface of your Touch Screen should be cleaned with a mild, abrasive free, commercially available glass cleaning product. All pH neutral materials (pH 6 to 8) are good for cleaning. Cleaners with pH values 9 to 10 are not recommended. Cleaning with water and isopropyl alcohol is possible as well. Do not use solvents containing acetic acid. Use a soft, fine-meshed cloth to clean the surface. Dampen the cloth slightly and then clean the screen.

A wrong maintenance may cause damages to the screen, which are not covered by guarantee or warranty.

Swipe Card Reader (optional)

The swipe card reader can read three ISO tracks simultaneously in one single swipe.

The MSR module is fitted on the right-hand side of the screen module. The connection is made via the keyboard interface (see manual swipe card reader).

How to Operate

Run the swipe card through the slit of the swipe card reader from top to bottom in a quick and steady movement. Make sure that the magnetic strip is to the right.

When using swipe cards, the following should be observed:

- swipe cards should never be allowed to come into contact with liquids.
- swipe cards should not be bent or folded in any way.
- swipe cards should not be allowed to come into close contact with a magnetic field.

Swipe cards should only be inserted in the top of the specially designed slit of the reading device. If the card is inserted in another place, the reading head could be damaged.

Cleaning Instructions

In order to guarantee good reading results over a longer period of time, the swipe card reader should be cleaned once a week. This is carried out by using a special cleaning card that can be purchased from Wincor Nixdorf International GmbH.

Clean the surface of the swipe card reader with a suitable commercially available surface cleaner.

Make sure that the power plug is disconnected, connector cables are unplugged and that no liquid finds its way into the device.

Waiter Lock (optional)

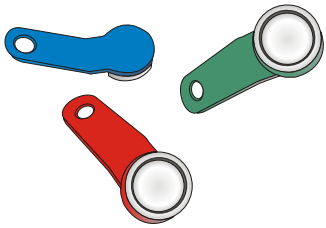

Each transaction is correctly assigned to the personell by using the magnetic key. The magnetic keys are available in 10 different colors.

The magnet keys are waterproof, shatterproof and by the 16-digit key number also safe for clear identification.

The operation of the system is very simple, the key is placed onto the magnetic probe (see figure).

The key is held magnetically to the probe and transmits the data by an electrical RS232 interface.

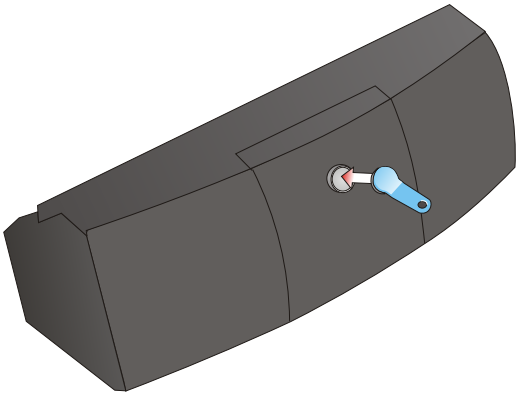

The readout of the data may be integrated easily into a software application.

Barcode Scanner (optional)

The barcode scanner is assembled in the front side of the BEETLE /iPOS.

The innovative, state of the art scan engine incorporates a scan motor, that provides the power to scan linearly and omni-directionally.

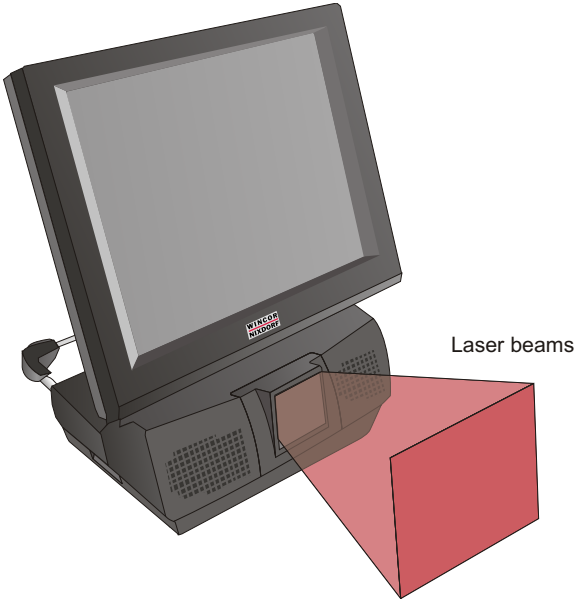

As omnidirectional laser scanner which direct the laser beam in all directions by means of a rotating mirror, the scanner is used wherever the performance of a hand-held scanner needs to be exceeded and the “point of sale” only offers restricted and little room for scanning.

Barcodes are read simply by being guided to the scanner window.

Note on the laser

The scanner contains a light-emitting diode (LED), classified according to IEC 825-1:1993:LASER CLASS 1; it must not be opened.

Configuration variants

Availability of Interfaces

The following table shows the availability of interfaces combined with the different system configurations. The first line contains the standard BEETLE/ iPOS system with the available ports, each following line the standard system (S) with add-on modules.

The interfaces marked with a dot ● indicate the availability.

iPOS Configurations	COM1*	COM2*	COM3	COM4	Dual Screen		cashd	LAN	USB	SPK	MIC
					CRT	TFT					
Standard (S)	●	●						●	●	●	●
S+ POS-Board (P)	●	●	●	●			●	●	●	●	●
S+ CRT	●	●			●			●	●	●	●
S+ P+ CRT	●	●	●		●		●	●	●	●	●
S+ TFT	●	●				●		●	●	●	●
S+ P+ TFT	●	●				●	●	●	●	●	●

Submodules for the CPU

Various controllers can be plugged in on the CPU. In the following please find a brief description of the available options.

POS Board (COM 3*, COM 4*, Cash Drawer)

The POS board possesses two more interfaces, COM3* and COM4*, which are not power supplied. Furthermore, it provides a RJ12 socket as cash drawer interface.

The COM2* interface is useable in case of a configuration with touch screen functions and POS board as another internal COM interface for the touch screen is made available.

CRT- Bridge or TFT- Controller

Both are installed alternatively. You can connect either an analogue CRT monitor or a TFT-LCD module. All kind of flat screens or CRT monitors can be connected to this controller, if they have a standard CRT interface (analogue interface).

The screen settings are made automatically via DDC.

Installing the Submodules

Ensure that the system is switched off and that the power connector is disconnected.

- Remove the cover of the loudspeaker and the cover of the ports.
- Loosen the screws (see arrows) at the bottom side of the screen.

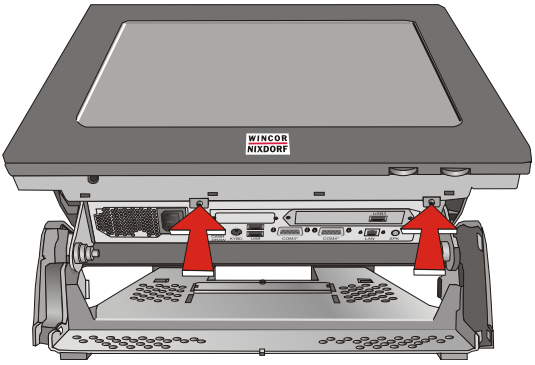

- Push against the rear side of the screen (1) and pull it to the bottom (2).
- Tilt it to the front. Now you reach the cable connectors inside.

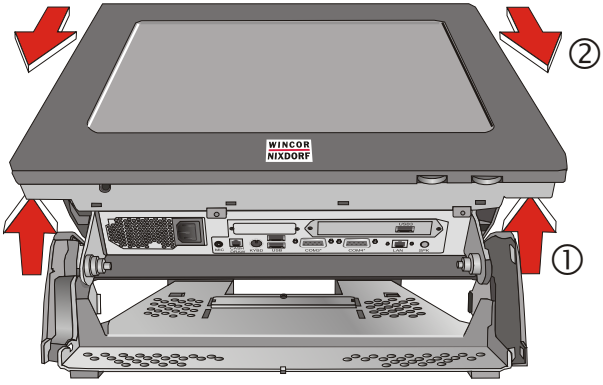

- Pull the air duct off (1) and disconnect the cable (2).

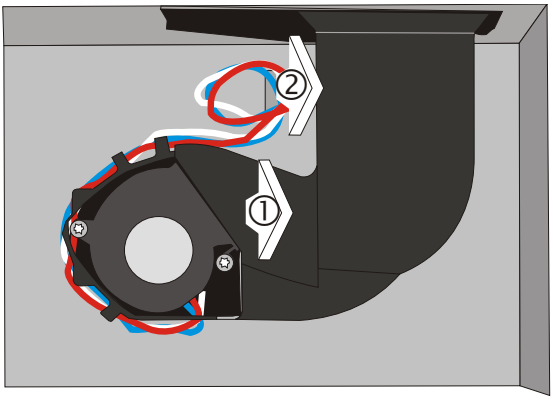

- Remove the four cable connectors. Begin with the display data cable (3).

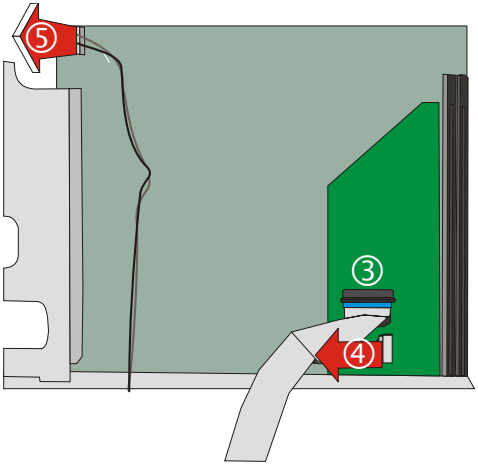

- Push the plug socket a little to the front (see arrows) and pull the cable out of the socket.

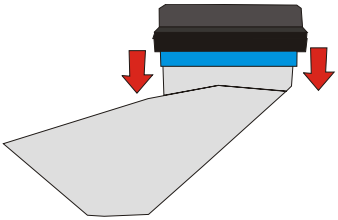

- Remove the other cables (4+5).

- Loosen the cable (6) at the rear side of the screen.

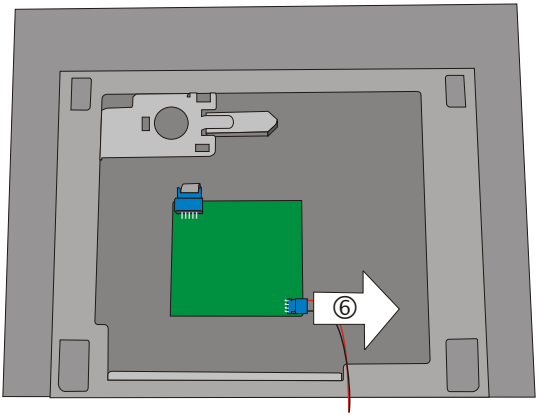

- Lift the screen module out of the guidance.

Inserting a POS Board

Ensure that the system is switched off and that the power connector is disconnected. Open the system. The hard disks have to be removed, so that the board can be installed.

- Remove the cable connections to the hard disc (see arrows).

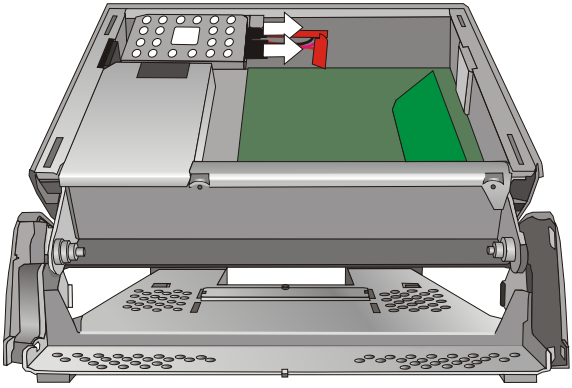

- Raise the metal cage and the hard disk upward (1) and push them to the right (2). Put them aside.

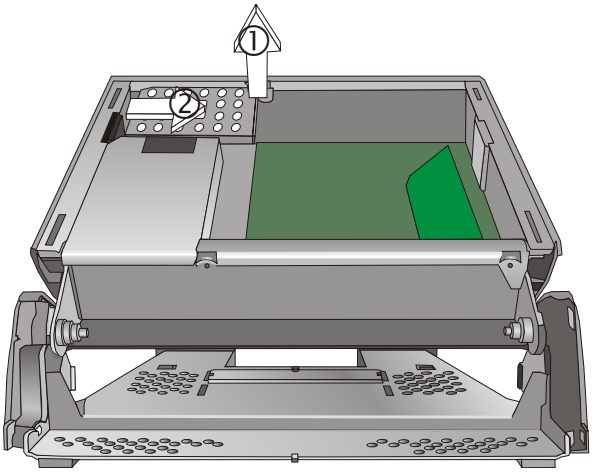

- Put the power cord of the CRT bridge aside.

- Break away the metal plates that cover the connections of CSHDRW, COM3*, COM4*.Push the COM3* and COM4* connections through the breakouts. Tighten them at the bezel.

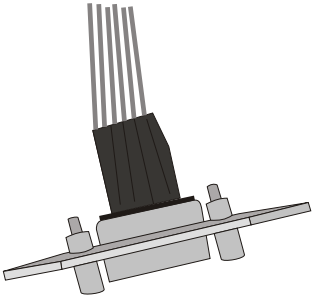

COM3*

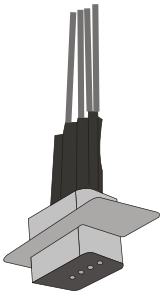

COM4* connector

- Loosen the screws of the cover plate on which the TFT Display adapter is mounted.

- Push the adapter through the slot (1). Mind that the cashdrawer plug on the board is sufficiently pushed through the slot so that the board fits into the connector. Push the board until it engages (2).

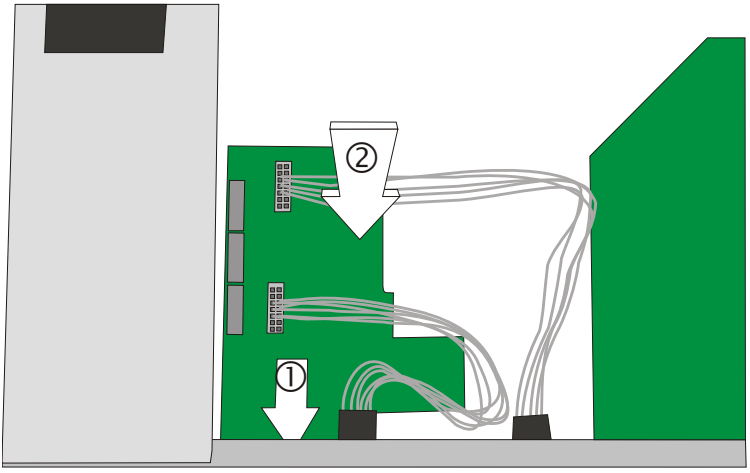

- Connect it to the COM3 and COM4 port on the POS board.

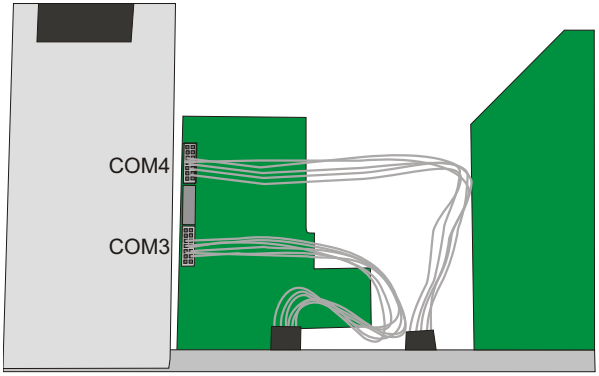

- The POS board is installed. Plug all cable connections that you loosened before and insert the hard disk and the cooling system. Close the screen and install the bezel. Finally, bring the bezel for the loudspeaker into the right position.

Inserting a CRT Bridge

- Follow the instructions of installation the submodules (see page 40 et seq.).
- Remove the metal plate covering the connection for the bridge.
- Insert the CRT bridge and pin it to the motherboad.
- Tighten the bridge at the bezel with the two screws. Use the upper bore holes.

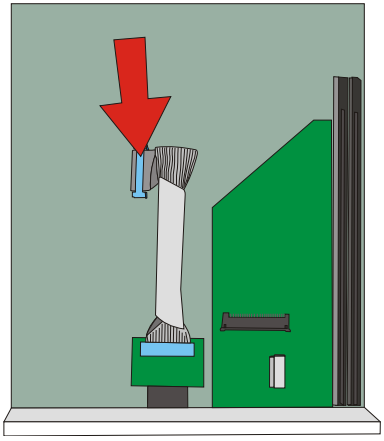

The CRT bridge is installed. Plug all cable connections that you loosened before and insert the cooling system. Close the screen and install the bezel. Finally, bring the bezel for the loudspeaker into the right position.

Inserting a TFT Controller

- Follow the instructions of installation the submodules (see page 40 et seq.).
- Remove the LPT1 metal plate covering the connection.
- Connect the TFT controller with the motherboard. To do so: push the clamps of the plug sidewards.

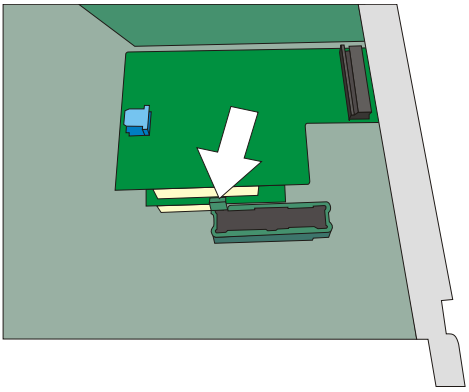

- Secure the controller with two screws. Use the lower drill position (see arrows) and screw the controller to the bezel.

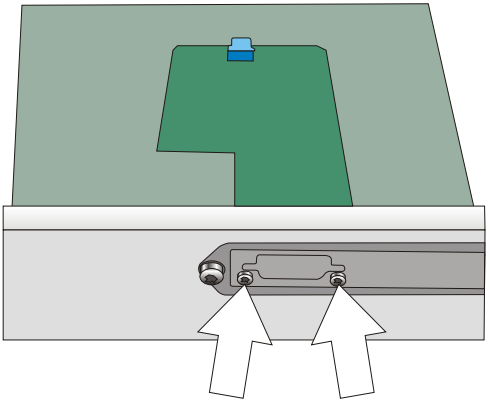

- A connection module is past of the TFT controller: plug it from behind into the bezel next to the controller.

- Connect the flex cable to the controller plug (see arrow).

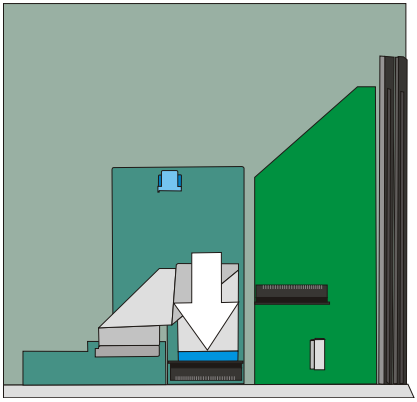

- Screw the module to the bezel by using the long screw for the bore hole at the right side, the shorter screw for the left bore hole.

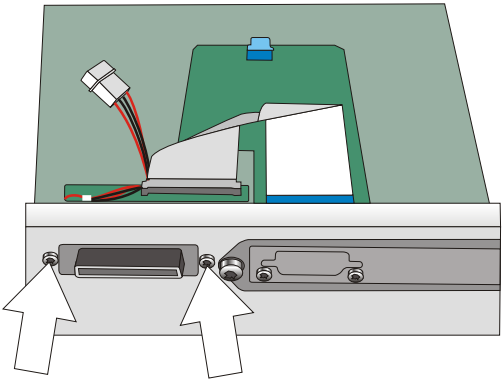

- Connect the power cable so that you can insert the cooling system again until it engages.

Connect all cables that you loosened before. Close the screen and install the bezel. Finally, bring the bezel for the loudspeaker into the right position.

Change of the Hard Disk Drive

To change the hard disk drive open your BEETLE /iPOS as described above (see page 40 et seq.).

- Disconnect the cables of the hard disk and put the hard disk aside.

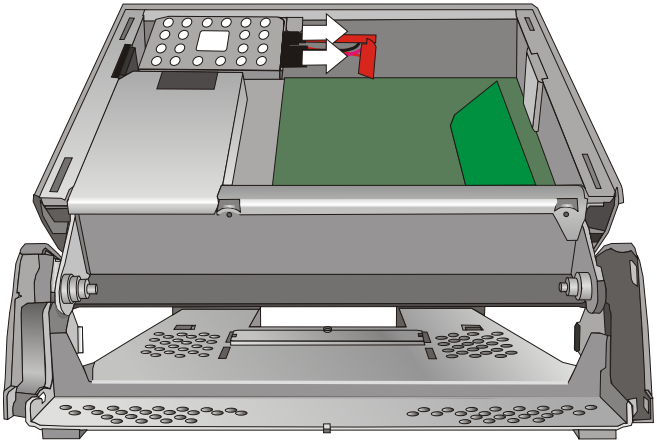

- Tilt the metal cage and the hard disk upward.

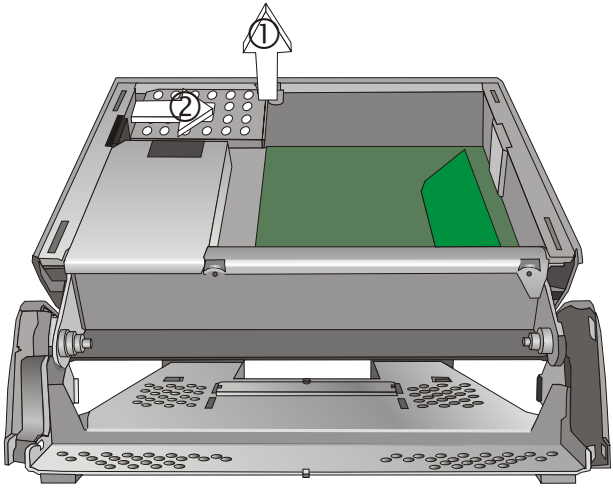

- Loosen the four screws. Exchange the unit.

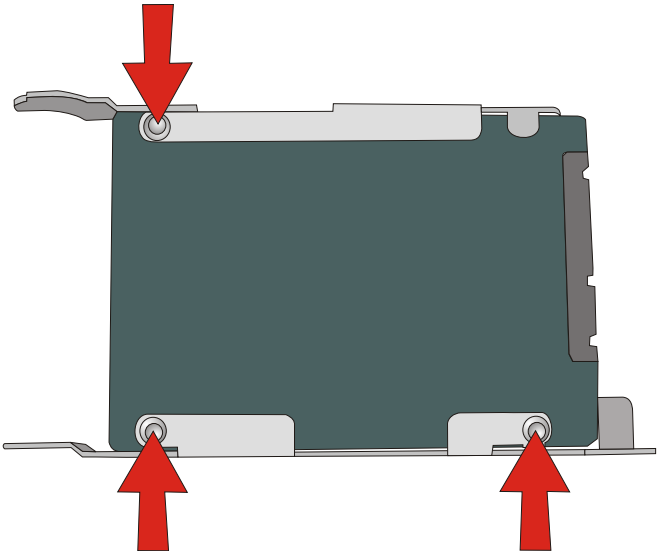

Insert the metal cage and the air duct at the correct positions.

Connect all cables that you loosened before. Close the screen and install the bezel. Finally, bring the bezel for the loudspeaker into the right position.

Start and runup behaviour

After installing the BEETLE /iPOS, plug in the mains power cord and switch on the POS system using the ON/OFF button on the front panel.
The system first performs an automatic self-test to test its basic functions.

For example, you may see the following message (irrespective of processor type) on the monitor:

WN BAS xx/xx Date

xx/xx is the place holder of the BIOS version number

The system then determines the medium from which the operating system and POS application are to be booted. Each medium is assigned a logical drive according to the configuration of your BEETLE /iPOS.

The following media can be assigned a drive:

- Network
- Hard disk
- DVD- ROM
- USB drive

The logical drives are designated C: and D:.

The network is always assigned to the C: drive during the runup procedure. The hard disk can be assigned to the C: or D: drive. The system can only be started from the hard disk if the disk has been configured as the C: drive.

Corresponding to the BIOS Setup configuration the compact BEETLE /iPOS can be booted from the following drives:

- Hard disk in drive C:
- LAN module with BOOTPROM
- DVD-ROM
- USB drive

Please mind that the storage medium must contain an operating system.

The loading process automatically continues from drive C:.

If the operating system has started up without error, the POS application software is automatically booted, if necessary.

A message is displayed as soon as the BEETLE /iPOS is ready for operation. For more detailed information, see the description of your application program.

Retail Software

Wincor Nixdorf has a worldwide portfolio of standard products to meet the complex business and technology demands placed on retail store solutions, such as:

- Long product lifecycles
- International deployability
- Flexible customizing and expansion options
- Excellent integrability
- Convenient features for central store control

The portfolio of store solutions covers all this – with broad support for leading operating systems, such as Microsoft and Linux, and a variety of functions geared to different requirements. But simply providing products that will remain viable in the future is no longer enough. Nowadays, retailers also expect extra services such as project management, customizing and integration as well as advice on choosing basic core technologies.

Platforms and products

Solution platforms today are expected to use advanced, standard operating systems. Some of the decisive factors in choosing an operating system include:

- User-friendly administration mechanisms to optimize total cost of ownership (TCO)
- Flexible deployability of the operating system with different hardware and peripherals
- Global availability to ensure blanket coverage
- Scalability to meet changing requirements

Microsoft operating systems fulfill these criteria and have become established on the market. In addition, Linux has set a trend under aspects of scalability and optimizing TCO, and is an interesting supplement to the Microsoft

world for users in any line of business. Wincor Nixdorf's solution portfolio covers both Microsoft and Linux platforms, allowing users to take their pick.

Microsoft-based solution: TP.net

TP.net is a store solution that enables IT to be organized flexibly at stores. Its international availability, ease of customizing and expansion, variety of application options based on an innovative software concept, outstanding integrability and low TCO make TP.net the ideal solution platform for all checkout processes at modern stores. Using TP.net, it is possible to implement diverse checkout concepts – ranging from conventional points of sale to self-checkout and mobile shopping assistants – without increasing the complexity of store IT or having to duplicate the development of functions.

With TP.net Enterprise, TP.net provides additional convenient facilities for central monitoring and control of your entire store landscape.

Linux-based solution: TPLinux

TPLinux is one of the most flexible Linux-based store solutions available on the global market. With its versatility of use, outstanding integration mechanisms and the experience gained from over 50,000 TPLinux installations worldwide, TPLinux is ideal both for modernizing store IT and for migrating and using established POS hardware platforms.

The Web architecture of the Back Store module provides access to all the administrative applications and data for a store from any workstation on the network, whether at that or another store or at the head office.

Technology evaluation

Wincor Nixdorf always involves its customers when designing and developing its retail solutions. Before being included in existing products, new trends and technologies are carefully examined to make sure they are ready for the market. Evaluation projects conducted with customers and partners place technology decisions on a sound market footing and significantly reduce technological risks.

Appendix

Technical data for the BEETLE /iPOS

Box		
12” Width, Depth, Height	316 x 295 x 347 mm	see next page
15” Width, Depth, Height	390 x 333 x 405 mm	see next page
Weight		
12”	approx. 9 kg	
15”	approx. 11 kg	
Climatic category		
Operating	IEC 721-3-3 Class 3K3 +5°C to +40°C	
Transport	IEC 721-3-2 Class 2K2 -25°C to +60°C	
Storage	IEC 721-3-1 Class 1K2 +5° C to +40°C	
Input voltage	100 - 120 VAC 200 - 240 VAC	
Max. power consumption	0,6A/ 1,2A	
Noise Development	Acc. to 3. GPSGV 70 dB(A) or less	

Screen

	12.1” (SVGA)	15” (XGA)
Resolutions Horizontal	800	1024
Vertical	600	768
LCD Technology	TFT, 18 Bit	
Surface		
w/o touchscreen	Glass	
capacitive touchscreen	anti-reflection,	
resistive touchscreen	Polyester topsheet	
infrared touchscreen	Glass protective layer, anti-reflection	
Data transfer (Touch Screen)	Bi-directional, asynchronous, Xon-Xoff protocol, RS232, COM5/COM2, 2400 Bd, 8bit	
(Screen)	PanelLink Interface	
Frequencies	12.1” (SVGA)	15” (XGA)
horizontal (Khz)	29	48.3
vertical (Khz)	47	60
Brightness	(with/ w/o Touch) approx. 190/230 cd/m² (center LCD)	

F2 Basic Motherboard

Architecture	PC compatible and POS specific units
Chip Set	Intel 915GME
Microprocessor	Celeron M 370 1,5 GHz processor Pentium M 760 2,0 GHz processor
RAM bus frequency	800 MHz
BIOS	512 MB Flash Memory, Phoenix BIOS, PnP Rev. 1.0A, DMI support

Interface

COM	COM1*, 2* (powered) + 12V/900mA (max. total), 600 mA max. pro COM + 5V/500mA (max. total)
USB (Universal Serial Bus)	3 USB at the front
PS/2 -keyboard or	PC compatible (6pin Mini DIN plug) keyboard and mouse signales
PS/2 - mouse	via a Y cable connected with the keyboard
PCI	PCI Rev. 2.1 100 pin connector for the Retail specific POS Board 80 Pin connector for Plug in Moduls
MIC, Speaker	ports for microphone and loudspeaker 2 x 1.25 Watt/8 Ohm volume adjustable via system software
Hard disk	2.5" SATA- interface

Dimensions

BEETLE /iPOS with a 12.1” screen

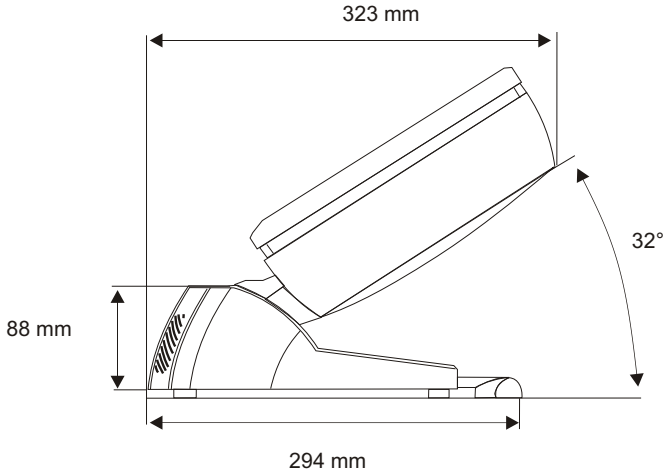

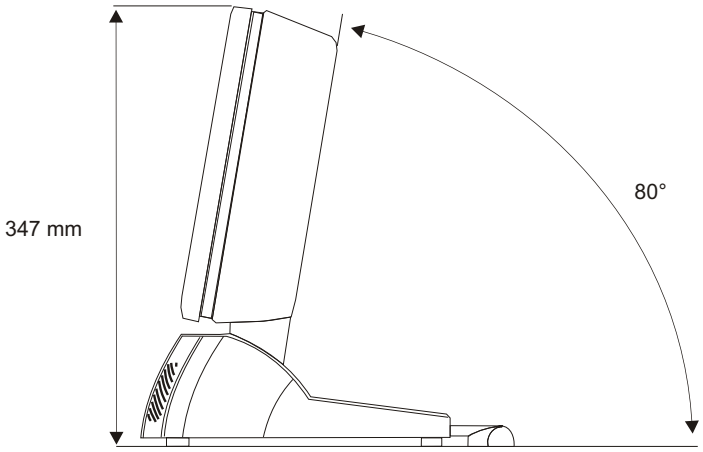

upright position

BEETLE /iPOS with a 15” screen

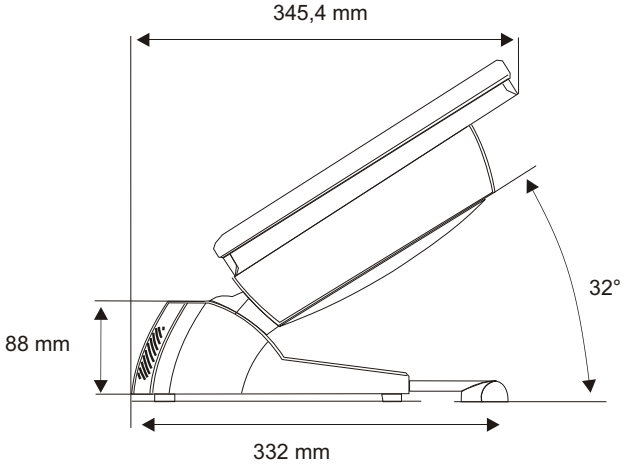

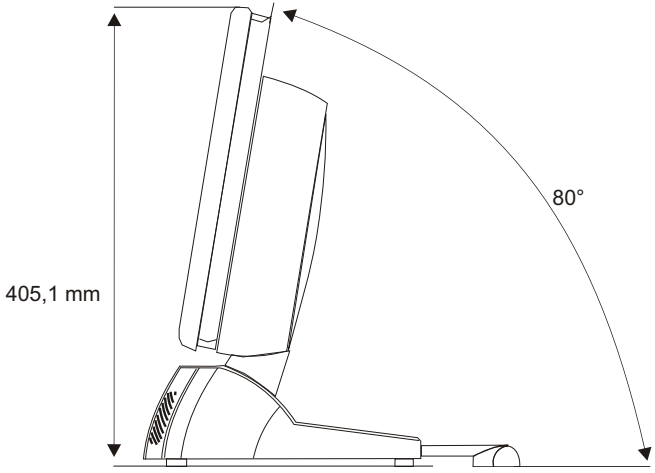

upright position

BEETLE /iPOS with a 15” screen and a customer display

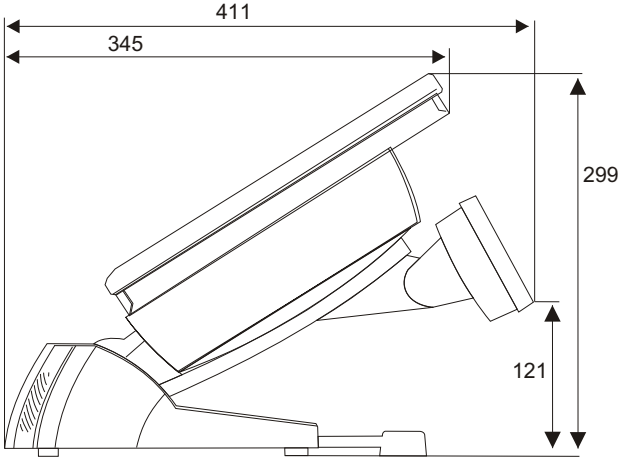

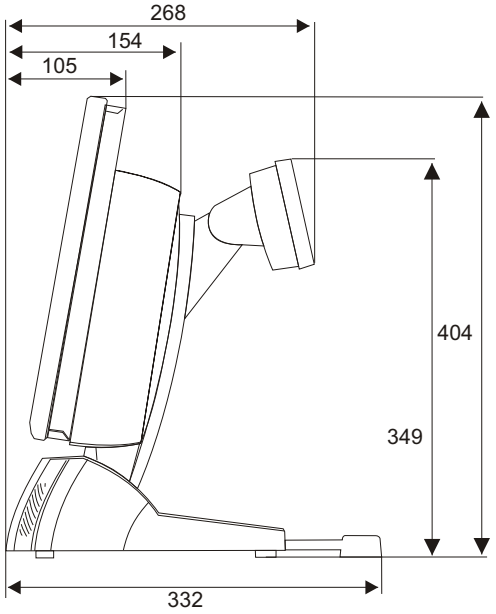

Dimensions in mm

Connections

Standard

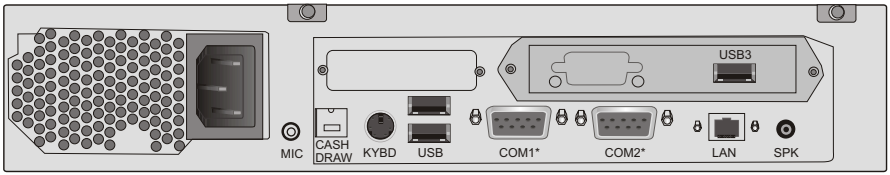

Versions

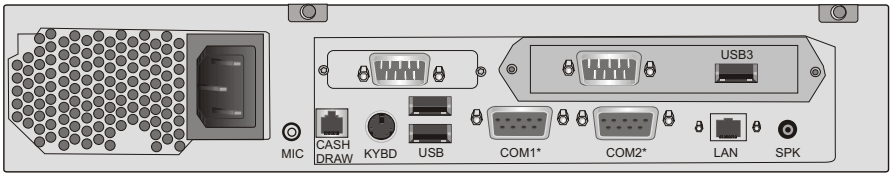

with POS board

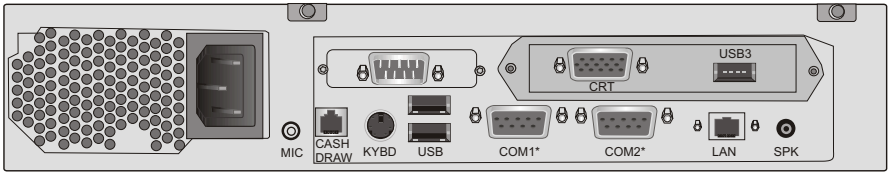

with POS board and CRT bridge

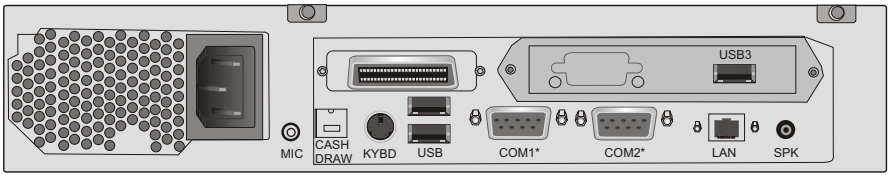

with a secondary TFT controller

Glossary

Bit
A bit is a binary digit (0 or 1). It is the smallest unit used in data Serves to control data input and output in a data processing system or between a computer and the connected peripherals.

CPU
Abbreviation of central processing unit. It includes the main components of a data processing system. The CPU monitors all operations and provides data and programs. It comprises the control unit for input and output, the computer and the main memory, divided into ROM and immediate access storage.

Interface
Designates the transition point between different hardware units and software units or between hardware and software units of computers or their peripherals.

JEIDA
Abbreviation of Japan Electronic Industry Development Association. Industry standard for memory cards.

Operating system
Refers to all programs that are a component of a computer and are required for operating the system and executing application programs.

PCMCIA
Abbreviation for Personal Computer Memory Card International Association. Industry standard for memory cards.

Plug and Play (PnP)
PnP means the automatic recognition of hardware components by the system. Thus the installation, integration and configuration of new components is made substantially easier.

Peripherals
Devices serving as an input/output device or storage for a computer. This includes, for example, document readers, keyboards, printers and disk storage.

Server

This is a computer connected to a local network and whose services are available to all of the network subscribers, e.g. a print server for printing the data from all of the network subscribers on the printer connected to the server.

VGA

Stands for Video Graphics Array and is the interface for connecting colour monitors.

Abbreviations

AT	Advanced Technology
ATA	AT-Attachment
BIOS	Basic Input Output System
COM	Communication Port
CPU	Central Processing Unit
CRT	Cathode Ray Tube
cUL	canada Underwriters Laboratories
DDC	Display Data Chanel, VESA standard
DIMM	Dual Inline Memory Module
ECP	Extended Capability Port
EPP	Enhanced Parallel Port
EPROM	Erasable Programmable Read Only Memory
FD	Floppy Disk
GS	“Geprüfte Sicherheit” (Tested Safety)
HDD	Hard Disk Drive
HFT	High Frequency Table
HSF	Hash File Access Method
IDE	Integrated Drive Electronic
ISA	Industrial Standard Architecture
ISO	International Standardization Organization
JEIDA	Japan Electronic Industry Development Association
LAN	Local Area Network
LBA	Logical Block Addressing
LED	Light Emitting Diode
LPT	Line Printer
OEM	Original Equipment Manufactures
PCI	Peripheral Component Interconnect
PCMCIA	Personal Computer Memory Card Intern. Association
PnP	Plug and Play
RAM	Random Access Memory
ROM	Read Only Memory
SCSI	Small Computer Systems Interface
SD RAM	Synchronous Dynamic Random Access Memory
SIMM	Single In Line Memory Module
SRAM	Static Random Access Memory
SVGA	Super Video Graphics Array
TFT	Thin Film Transistor
UPS	Uninteruptable Power Supply
UL	Underwriters Laboratories
USB	Universal Serial Bus